66 Series
High Pressure Pumps

From
General Pump

General Pump is part of the Interpump Group, the world leader in plunger pumps.

The Synthesis of Experience

GENERAL PUMP

GP Companies, Inc.
1174 Northland Drive
Mendota Heights, MN 55120
Tel: 651.454.6500 Fax: 651.454.8015
Email: sales@gpcompanies.com
www.generalpump.com

GENERAL PUMP

66 Series - *The Synthesis of Experience*

66 Series Applications

Pressure Cleaning Applications

Pre-painting Surface Preparation:
Surface cleaning
Paint removal
Wet-sandblasting

Heavy Equipment Maintenance:
Dirt and mud removal
Grease and oil removal
Parts washing

Contract Cleaning:
Sidewalk cleaning
Driveway cleaning
General cleaning

Industrial Applications

Misting/Fogging:
Evaporative cooling
Fire suppression
Tower cooling
Power generation

Industrial Process:
Hydraulic ram/press operation
Hydrostatic testing

Industrial Cleaning:
General cleaning
Surface stripping
Scale removal
Industrial pressure wash
Trailer mount systems
In-plant stationary systems
Large portable systems

Food Processing:
Poultry deboning
Sanitation

OVERALL PUMP DIMENSIONS: 13.84" x 9.8" x 7.7"

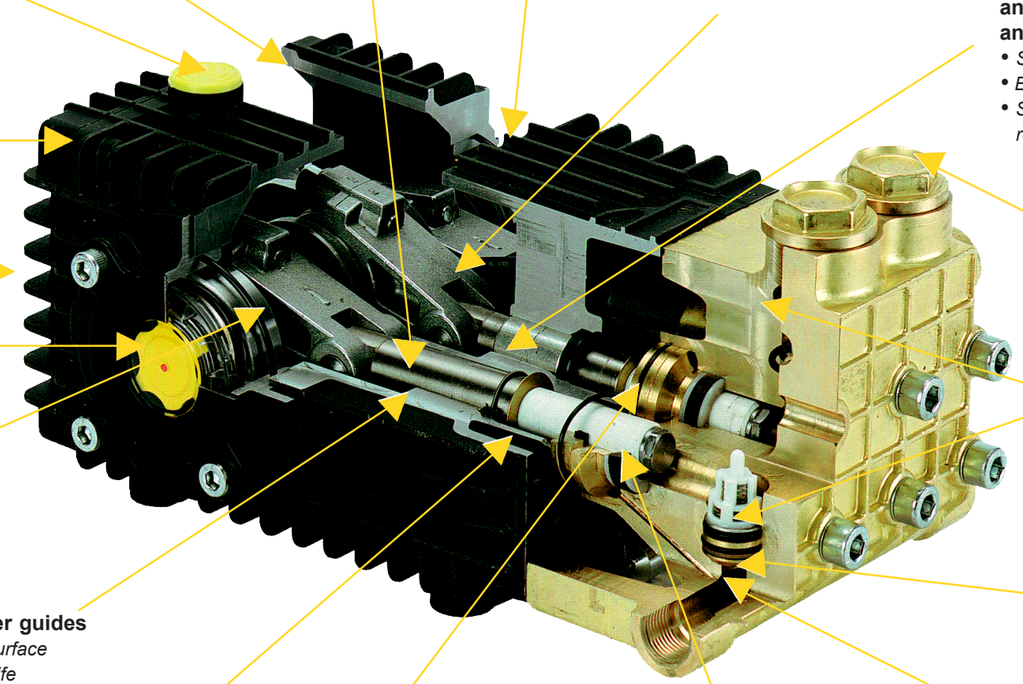

O-ring groove in crankcase vs cover
- *Eases installation*
- *Increases strength of rear cover*

Exclusive and innovative plunger guide design allows for even greater ceramic thickness
- *Decreases possibility of cracking from thermal shock*

Forged crankshaft
- *Increases load potential*
- *Reduces fatigue*

Oversized 2-piece white bronze connecting rods w/ 2, 8 mm bolts and special oil reservoirs
- *Increases strength and stability*
- *Friction and heat reduction extends life*

31.04 oz. oil capacity
- *Better cooling*

Piston guide bushings in an *exclusive* teflon, graphite and bronze
- *Superior strengh*
- *Easily replaceable*
- *Smoothest possible surface results in longer seal life*

Fully anodized crankcase
- *Better protection against environment*

Valve Plugs vs Plate
- *Easy access to single valve*
- *Quick repair/maintenance*

Two sight glasses
- *Easier to monitor oil levels*
- *One is bayonet style for easy replacement*

Stacked Valve Design for Better Efficiency
(see valve above)
- *Efficient water inlet*
- *Closer to plunger*

Oversized cylindrical roller bearings
- *Higher load capabilities*
- *Increases life of pump*

Replaceable Inlet Valve Seat
- *Protects manifold from cavitation damage*

Nickel plated plunger guides
- *Smoothest possible surface results in longer seal life*
- *Superior strengh*

16 or 18 mm plungers
- *Offers wider range of flows and pressures*

No Inlet Valve Plug
- *Increased hydrostatic*
- *Increased durability*

Improved low and high pressure seals
- *Increases life*
- *Reduces maintenance*

White ceramic plungers
- *99% alumina-ceramic*
- *Competitors plungers are only 97%*
- *Increases resistance to pitting and wear*

Valve Poppets Are Machined Not Stamped
- *Better surface finish*
- *No cracking*
- *No stress points from stamping*
- *More durable, long lasting valve*

Stress Is All In Stack

Pump Models

TSP1621

Flow: 4.3 GPM
Pressure: 5800 PSI
RPM: 1450
Bore: .630 in./16 mm
Stroke: .826 in/21 mm
HP: 17.1 EBHP

TSP1819

Flow: 5.0 GPM
Pressure: 5000 PSI
RPM: 1450
Bore: .709 in./16 mm
Stroke: .472 in./19 mm
HP: 17.4 EBHP

TSP1821

Flow: 5.5 GPM
Pressure: 5000 PSI
RPM: 1450
Bore: .709 in./18 mm
Stroke: .826 in./21 mm
HP: 18.9 EBHP

Max. Inlet Pressure: 125 PSI
Max. Fluid Temperature: 156°F
Inlet Port Thread: 1/2"-14 BSP-F
Discharge Port Thread: 3/8"-19 BSP-F
Shaft Diameter: .945 in.24 mm
Min. Inlet Pressure: 30 PSI
Crankcase Oil Capacity: 31.0 oz.