TRIPLEX

GENERAL PUMP *A member of the Interpump Group*

ET1506G6U/I

Triplex Plunger Pump, Gas

FEATURES

- Nickel-plated cast manifold manufactured like heavy-duty pump line
- New generation seal package
- New dust protection chamber
- Solid ceramic plungers
- New oversized plunger guide
- New optimized inlet and outlet valves
- New oil seal
- New oversized crankcase
- Hollow shaft, flanged for direct couple to gasoline engines (SAE J609A)
- Features built-in unloader (U) or unloader and fixed injector (UI)

SPECIFICATIONS

Pump Model	**ET1506G6U/I**
Maximum Volume	2.9 GPM
Maximum Discharge Pressure	2,610 PSI
Maximum Pump Speed	3400 RPM
Maximum Inlet Pressure	125 PSI
Max. Inlet Vacuum	Flooded
Plunger Bore (in / mm)	.591 in./15 mm
Plunger Stroke (in / mm)	.256 in./6.5 mm
Oil Capacity	8.5 oz.
Maximum Fluid Temperature	165° F
Inlet Port Thread	1/2"-14 BSP-F
Discharge Port Thread	3/8"-19 BSP-M
Shaft Diameter	Hollow, 3/4"/19.05 mm
Weight	11.0 lbs.
Dimensions - Nominal	9.45" x 7.24" x 7.8"

TRIPLEX

General Pump
is a member of
the Interpump Group

GENERAL PUMP

Instructions and Recommendations for the Installation of *ET Series Pumps*

Maximum temperature of the water through the pump is 165ºF (73ºC).

In order to obtain maximum performance in terms of duration of seals and valves, it is necessary to respect a few simple rules, as follows:

1) **In order to avoid damage caused by cavitation, the pump must be pressure fed.**

   The higher the inlet pressure, the longer the life of the wet end of the pump.

   When working at 165ºF (73ºC), the minimum feed pressure - measured directly in the inlet port of the pump when it is working - is 45 psi (3 bar).

   The minimum feed pressure according to the different temperatures are:

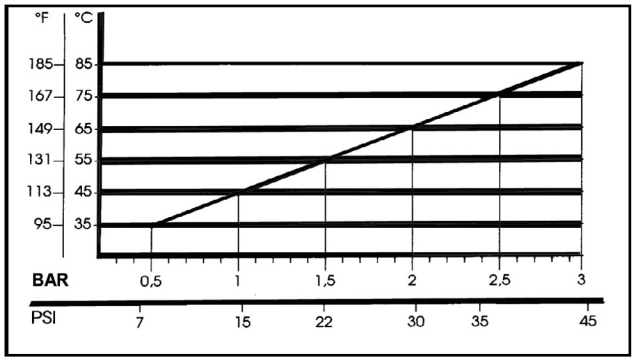

Naturally, if the application allows for feeding the pump with 45 psi (3 bar) even at low temperatures (for example: 115ºF/45ºC the life of the wet end of the pump will be even longer.

2) **The plumbing which feeds the pump must be of a diameter at least equal to the inlet port.** Also, follow the suggestions below:

   a) Make the plumbing as short and straight as possible, preferably in an upward direction to facilitate the expulsion of eventual air bubbles naturally if compatible with the requirements of the system.

   b) It is always useful to put a filter at the inlet with capacity of 4 to 5 times the flow of the pump, for example for a 4 gpm (15 l/min) pump, put a filter from 16 to 20 gpm (60-75 l/mi)The mesh size suitable for this application is 0.016" (.4 mm).

   c) It is extremely important to put a pressure switch on the suction port of the pump, and in any case downstream from the filter, so that it can stop the pump should the feed pressure drop by 20% due to the filter clogging or failure of the feed pump, etc.

3) **Change of oil**

   We recommend the ***first oil change after the first 50 hours***, with the ***pump stopped*** and the ***oil still warm***.

   This change is not recommended because the oil has lost its properties, but rather to eliminate the impurities that have gotten into the oil during the running-in phase. If these impurities are not removed, but are allowed to remain in the oil, they *may cause premature wear* to the moving parts and the oil seals. **After this initial change, the oil can then be changed every three months or 300 hours of operation thereafter.**

   Please note: If the pump works in conditions with high humidity and with sharp temperature changes, it is possible that condensation will appear inside the crankcase, which mixing with the oil can change its properties. This is easy to see because the oil changes to a white, milky color.

   If the pump does not have excessive water leaking from the packings, and the oil becomes milky, the oil has to be changed more frequently. The percentage of water in the oil must not exceed 20%.

   Use oil per the following chart:

CHART OF COMPATIBLE OILS SAE15W40	
General Pump	Series 100
BP	VISCO 2000
CASTROL	CWX
MOBIL	SUPER
SHELL	HELIX SUPER
TOTAL	QUARTZ 4000-5000

GENERAL PUMP *A member of the Interpump Group*

ET1506G6U/I
Hollow Shaft - Gas

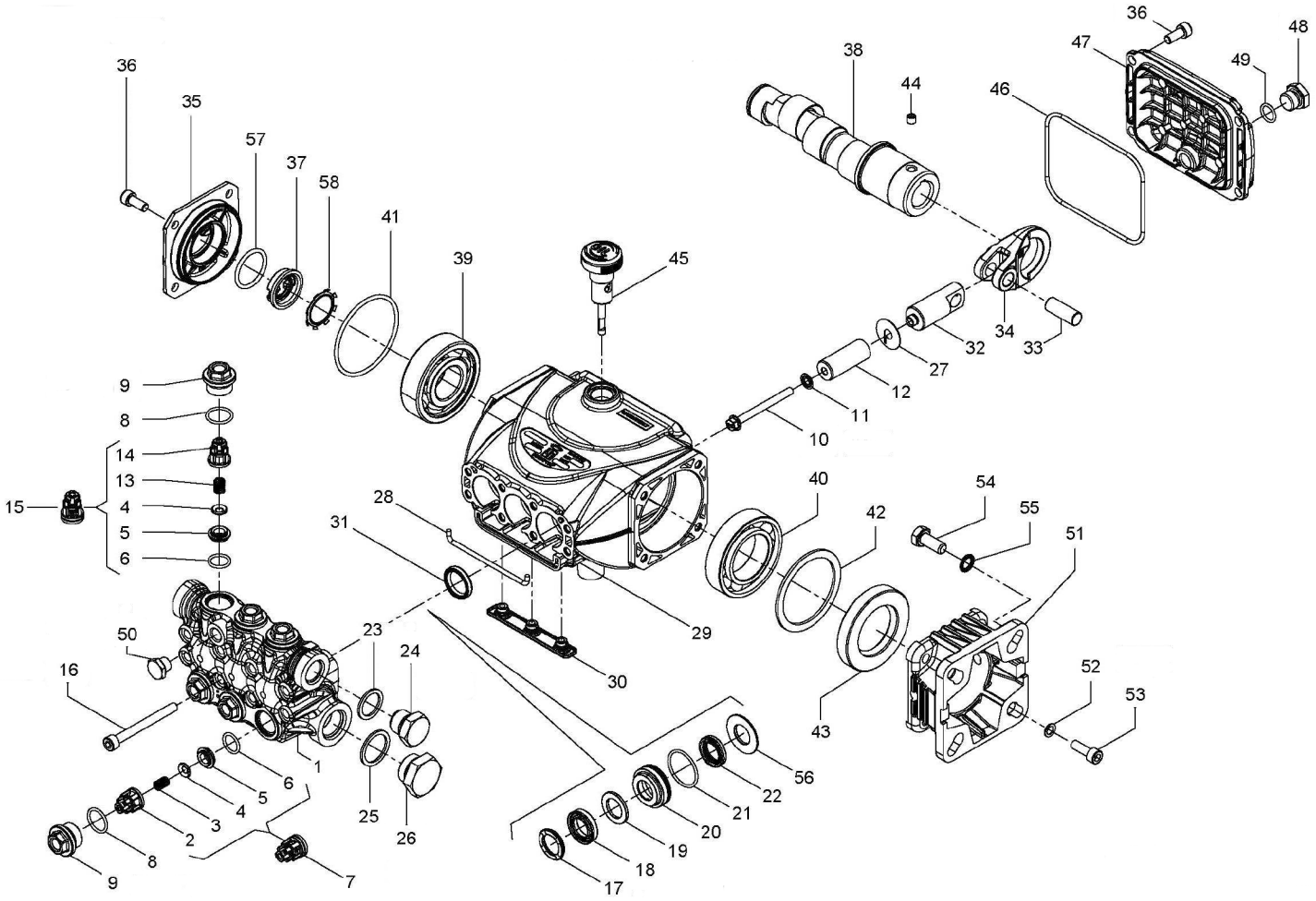

PARTS LIST

No.	Part No.	Description	Qty.
1	53120015	Manifold Ø 15	1
2	36211951	Inlet Valve Guide	3
3	94732600	Spring, Ø 6 x 12	3
4	36211276	Valve, Outlet	6
5	36211366	Valve Seat	6
6	90367400	O-ring, Ø 12 x 2	6
7	36722401	Valve Assembly	3
8	701016	O-ring, .614 x .070	6
9	98213750	Valve Cap, M18 x 1.5 x 10	6
10	99169000	Plunger Bolt, M5 x 55	3
11	96690500	Washer, Ø 5 x 11.5 x 0.4	3
12	53040009	Plunger, Ø 15 x 38.5	3
13	94733300	Spring, Ø 6.2 x 10.4	3
14	36211151	Outlet Valve Cage Guide	3
15	36719301	Complete Outlet Valve	3
16	99199000	Screw, M6 x 60	8
17	63101051	Head Ring, Ø 15	3
18**	90261100	Packing, Ø15x24x5.4/3.4 HP	3
19	90508990	Anti-ext Ring, Ø 15 x 24 x 2	3
20	53210170	Support Ring, Ø 15	3
21	90360400	O-ring, Ø 25.12 x 1.78	3

No.	Part No.	Description	Qty.
22	90260800	Packing, Ø 15 x 22 x 5 LP	3
23	96738000	Washer, Ø 17.5 x 23 x 1.5	1
24	98210050	Plug, 3/8" x 13	1
25	96751400	Washer, Ø 21.5 x 27 x 1.5	1
26	98218700	Plug, 1/2" x 10	1
27	96699000	Washer, Ø 7.5 x 23 x 0.5	3
28	53210382	Gasket, 3 x 85	1
29	53010022	Crankcase	1
30	58210451	Drip Cover	1
31	90159300	Oil Seal, Ø 18 x 24 x 4	3
32	53050066	Piston guide	3
33	97733800	Piston Pin Ø 10 x 26.5	3
34	53030022	Connecting Rod	3
35	53150022	Side Cover	1
36	99183700	Screw, M6 x 14	8
37	53210851	Oil Level Indicator	1
38	60027165	Crankshaft	1
39	91832800	Bearing	1
40	91846400	Bearing	1
41	90389800	O-ring, Ø 56.82 x 2.62	1
42	60210189	Spacer	1

No.	Part No.	Description	Qty.
43	90167500	Oil Seal, Ø 35 x 62 x 10	1
44	99179000	Screw, M6 x 6	1
45	98210800	Oil Dipstick G 3/8" x 45	1
46	90391700	O-ring, Ø 88.57 x 2.62	1
47	53160022	Rear Cover	1
48	98204250	Plug, F 1/4" x 9	1
49	90358500	O-ring, Ø 10.82 x 1.78	1
50	98196800	Plug, G 1/8" x 8	1
51	10065222	Flange, Gas, 3/4"	1
52	96693800	Washer, Ø 6.4 x 10 x 0.7	4
53	99186700	Screw, M6 x 18	4
54	99273000	Screw, 5/16" x 24"	4
55	96701400	Washer, Ø 8.4 x 13 x 0.7	4
56	53210670	Support Ring, Ø 15	3
57	90385900	O-ring, Ø 25.07 x 2.62	1
58	90067100	Stop Ring	1

**Use Loctite 542 Red

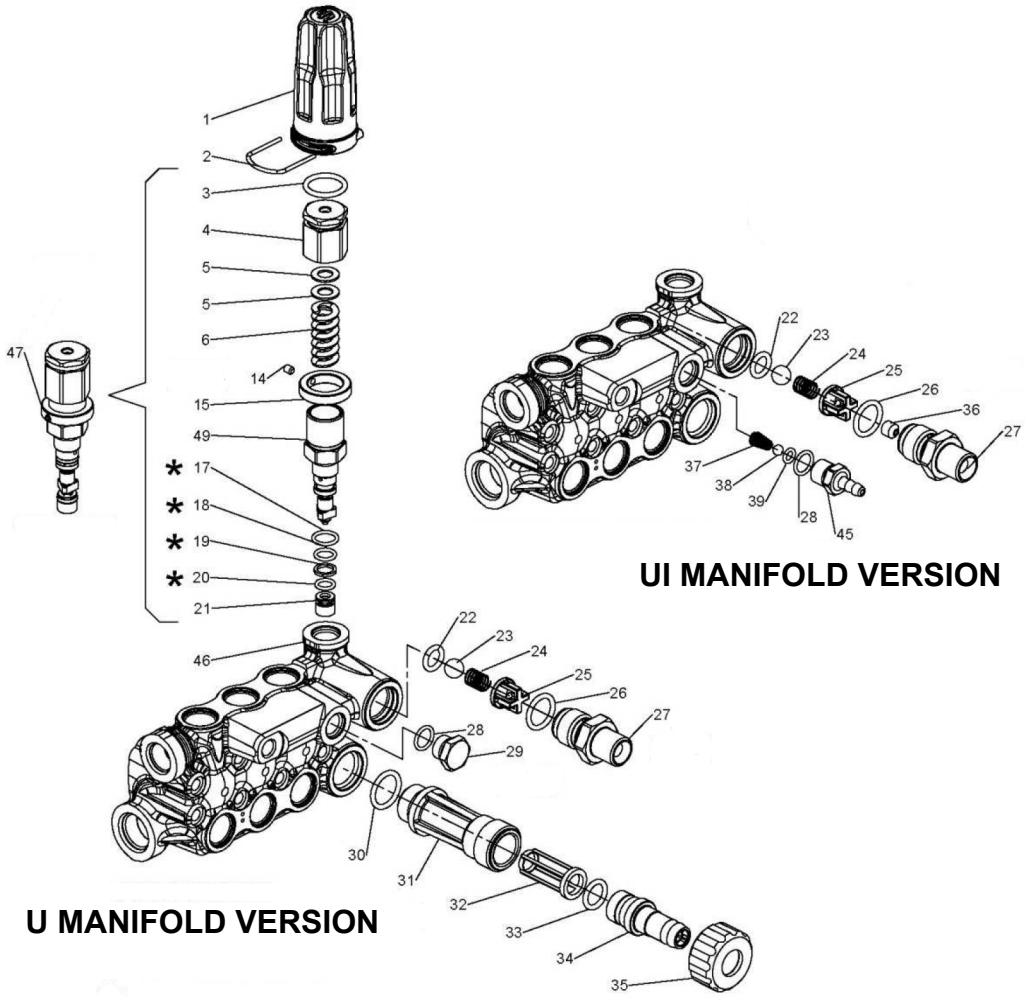

UI MANIFOLD VERSION

U MANIFOLD VERSION

PARTS LIST

ITEM	PART NO.	DESCRIPTION	QTY
1.	36350651	Adjustment knob	1
2.	10084666	Fork for adjustment knob	1
3.	90384500	O-ring, Ø18.72x2.62	1
4.	36348170	Pressure adjusting nut	1
5.	36348651	Washer	2
6.	94739500	Spring, Ø 11.3x34.5	1
14.	99126700	Screw, M04x5	1
15.	36347770	Pressure ring	1
17.	90358700	O-ring, Ø11.11x1.78	1
18.	90358100	O-ring, Ø8.73x1.78	1
19.	90503800	Anti-extrusion ring, Ø9x12x1.5	1

ITEM	PART NO.	DESCRIPTION	QTY
20.	90357800	O-ring, Ø7.66x1.78	1
21.	36348366	Valve seat	1
22.	90382300	O-ring, Ø9.92x2.62	1
23.	97483800	Ball, Ø 13/32	1
24.	94735500	Spring, Ø8.5x12	1
25.	36310451	Valve guide	1
26.	90383900	O-ring, Ø15.88x2.62	1
27.	36348770	Nipple, 3/8" NPT-M	1
28.	90358500	O-ring, Ø10.82x1.78 (U)	1
29.	98204100	Plug, 1/4"x9 (U)	1
36.	10079566	Nozzle injector	1

ITEM	PART NO.	DESCRIPTION	QTY
37.	94821700	Conical spring, Ø4.3/7.3x11	1
38.	97478200	Ball, Ø 7/32"	1
39.	90357300	O-ring, Ø5.28x1.78	1
43.	90359100	O-ring, 14x1.78	2
45.	36349270	Hose barb	1
	36023551	Swivel hose barb	1
46.	53120815	Manifold, NPT, left side unloader	1
47.	36605401	Unloader Assembly	1
49.	36606301	Valve Guide + Shutter	1

TORQUE SPECS

Position	Ft.-Lbs.	Nm.
14	0.13	0.6
27	9.9	44
29	4.5	20
31	2.7	12
36	2.7	12
45	4.5	20
47	3.2	14

GENERAL PUMP *A member of the Interpump Group*

ET1506G6U/I
Hollow Shaft - Gas

REPAIR KITS

KIT NO.	Valves K309	Valve Cap K310	Oil Seal K311	Packing Kits Ø 15	
				K312	K313
ITEM NO'S INCLUDED IN KIT	2, 3, 4, 5, 6, 13, 13, (7), (15)	8, 9,	31	17, 18, 19, 21, 22	17, 18, 19, 20, 21, 22, 57
NUMBER OF ASSY'S IN KIT	6	6	3	3	1
NO. OF CYLINDERS KIT SERVICES	3	3	3	3	1

TORQUE SPECS*

Position	Ft.-Lbs.	Nm.
9	44.3	60
10	4.4	6
16	8.9	12
24*	30	40
26	30	40
36	7.4	10
48	14.8	20
50*	9.6	13
53	7.4	10

*Decrease torque by 20% if threads are lubricated.
**Use Loctite 542 Red

DIMENSIONS

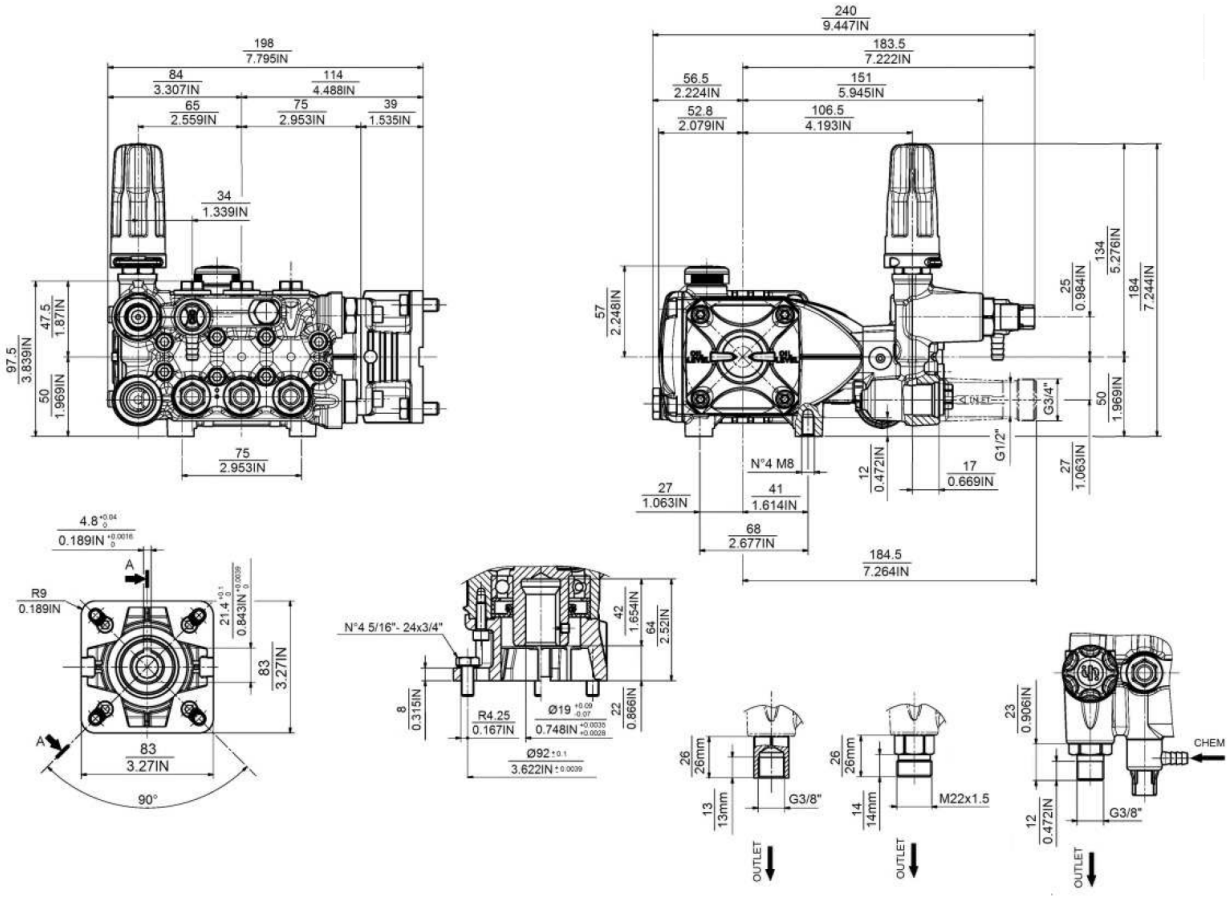

Ref 310166 Rev. A
04-19

GENERAL PUMP 1174 Northland Drive • Mendota Heights, MN 55120
Phone: 651.686.2199 • Fax: 800.535.1745 • e-mail: sales@gpcompanies.com • www.generalpump.com

GENERAL PUMP